Dakota™ PLUMBING PRODUCTS
"Quality for Life"

Signature COLLECTION | R-Series

DSR-7030

UPC: 813649021271

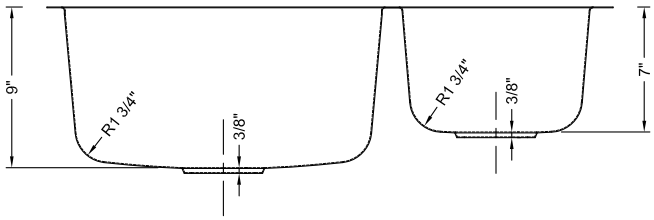

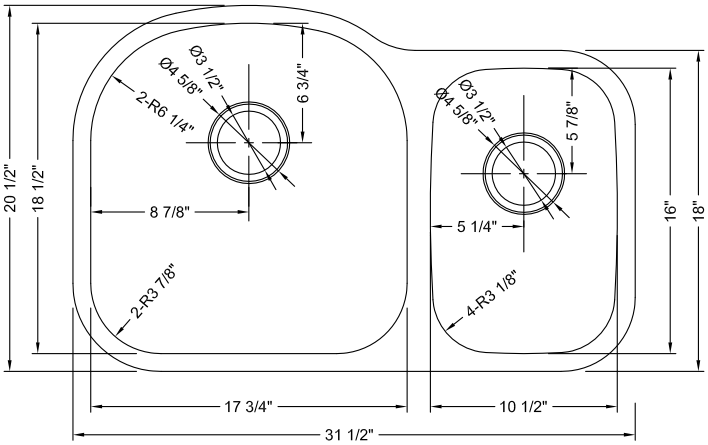

Style:

- Standard Radius
- Undermount
- Kitchen Sink
- 70/30 Offset Double Bowl

LIFETIME LIMITED WARRANTY

Size:

- Overall: 31.5"x20.5"x9"
- Bowl Size: (L)17.75"x18.5"x90" | (R)10.5"x16"x7"

Features:

- 16 Gauge Thickness
- 304 Stainless Steel Sink
- 18/10 Chrome/Nickel Content
- Extra Large Sound Cancellation Pads
- Thermal Undercoating

Certifications:

- cUPC

Warranty:

- Lifetime Limited Warranty

Available Color/Finish

Satin Brushed Nickel

Included Accessories:

- Bottom Grid(s): DSR-BG7030
- Basket Strainer: DSA-PBSSS
- 11 Piece Kitchen Kit*

*Sink kits only available with boxed non-bulk orders

© 2018 Dakota Plumbing Products, LLC | Call: 877-692-2300 or Fax: 954-987-3434

DakotaSinks.com