Dakota™ PLUMBING PRODUCTS
"Quality for Life"

Signature COLLECTION | M-Series

DSM-4060-1

UPC: 813649021370

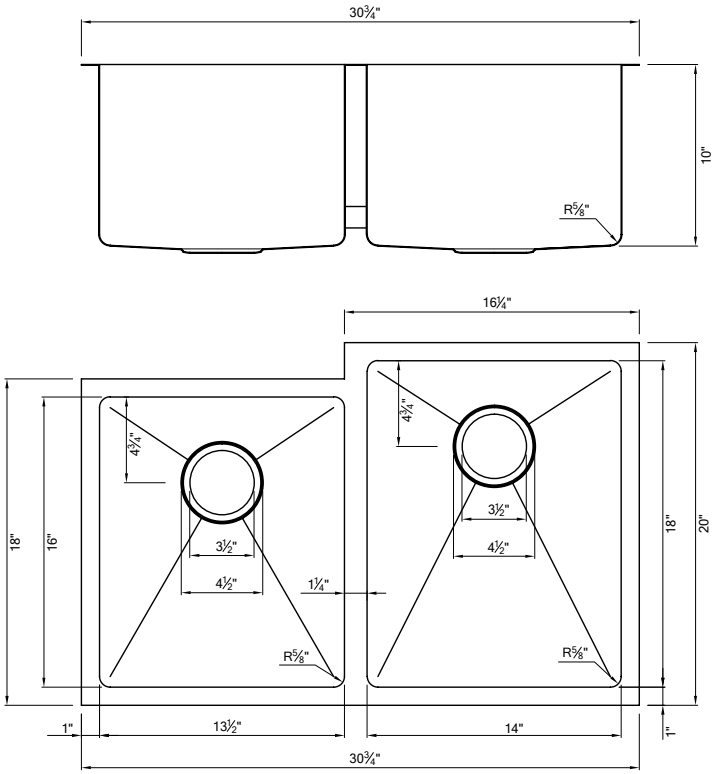

Style:

- Micro Radius
- Undermount
- Kitchen Sink
- 40/60 Offset Double Bowl

LIFETIME LIMITED WARRANTY

Size:

- Overall: 31.25"x20.5"x10"
- Bowl Size: (L)13.5"x16"x10" | (R)14"x18"x10"

Features:

- 16 Gauge Thickness
- 304 Stainless Steel Sink
- 18/10 Chrome/Nickel Content
- Extra Large Sound Cancellation Pads
- Thermal Undercoating

Certifications:

- cUPC

Warranty:

- Lifetime Limited Warranty

Available Color/Finish

BN	SV	GBK	CP	GD
Brushed Nickel	Silver	Gunmetal Black	Copper	Gold

Actual color may vary depending on lighting.

Included Accessories:

- Bottom Grid(s): DSMZ-BG4060-1
- Basket Strainer(1): DSA-PBSSS

© 2018 Dakota Plumbing Products, LLC | Call: 954-987-3430 or Fax: 954-987-3434

DakotaSinks.com