Dakota™ PLUMBING PRODUCTS
"Quality for Life"

BUILDERS COLLECTION | GENESIS SERIES M

# GSM-3018-9

## 18G MICRO RADIUS SINK

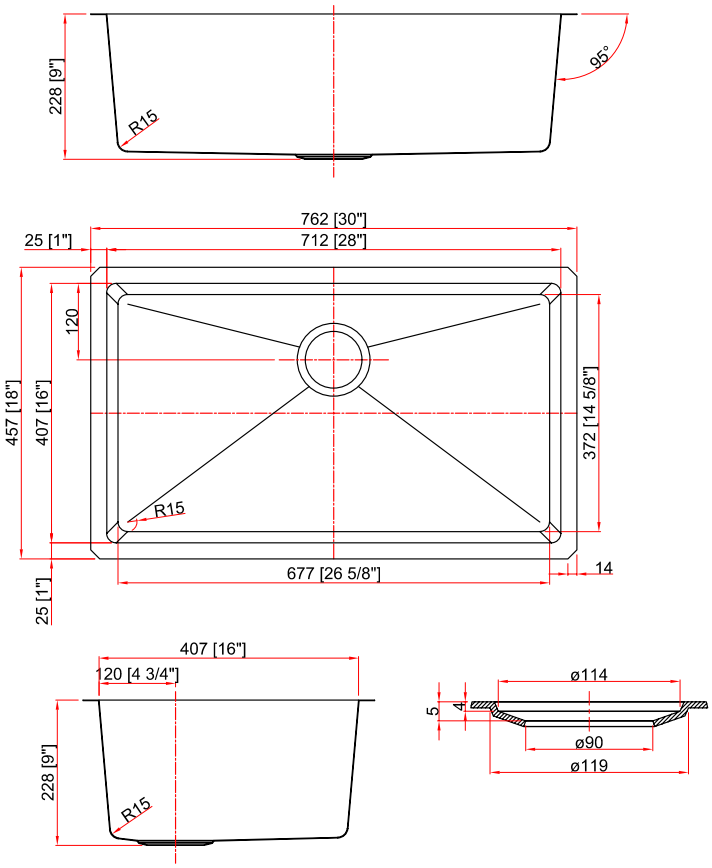


### Style:
- Micro Radius
- Kitchen Sink
- Single Bowl

LIFETIME LIMITED WARRANTY

### Size:
- Overall: 30" x 18" x 9"
- Bowl Size: 28" x 16" x 9"

### Features:
- 304 Stainless Steel Sink
- 18 Gauge Thickness
- 18/8 Chromium/Nickel content for anti-rust
- Faucet and Drain Sold Separately

### Available Color/Finish
- Brushed Nickel

### Certifications:
- cUPC

### Warranty:
- Lifetime Limited Warranty

### Available Accessories:
- Basket Strainer: DSA-PBSSS
- Bottom Grid: GSMZ-BG3018

UPC C ®

© 2021 Dakota Plumbing Products, LLC. | *Price may vary depending on color. Special Order, please allow 90-120 days for delivery.