Dakota™ PLUMBING PRODUCTS
"Quality for Life"

BUILDERS COLLECTION | GENESIS Z SERIES

GSZ-3218O-9

18G ZERO RADIUS SINK

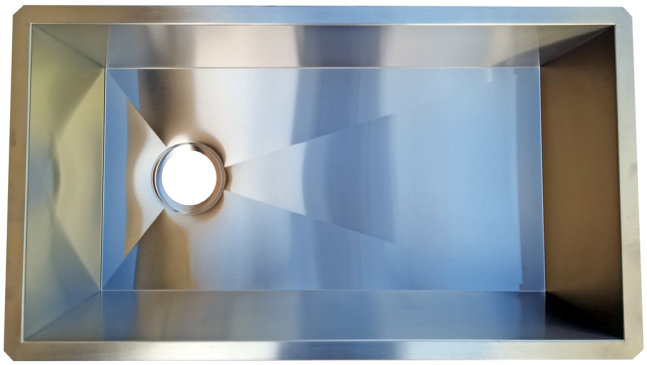

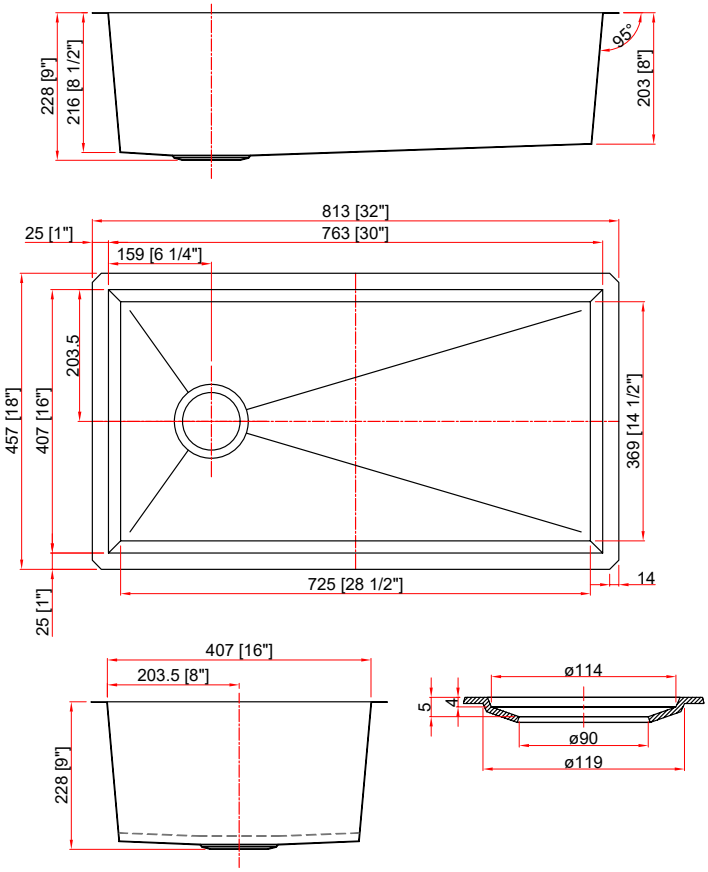

Style:
- Zero Radius
- Kitchen Sink
- Offset Drain
- Single Bowl

LIFETIME LIMITED WARRANTY

Size:
- Overall: 32" x 18" x 9"
- Bowl Size: 30" x 16" x 9"

Features:
- 304 Stainless Steel Sink
- 18 Gauge Thickness
- 18/8 Chromium/Nickel content for anti-rust
- Faucet and Drain Sold Separately

Available Color/Finish
- Brushed Nickel

Certifications:
- cUPC

Warranty:
- Lifetime Limited Warranty

Available Accessories:
- Basket Strainer: DSA-PBSSS

UPC C ®

© 2021 Dakota Plumbing Products, LLC. | *Price may vary depending on color. Special Order, please allow 90-120 days for delivery.